Appendix

E

Heating Ventilation & Air Conditioning

Blank

Page

E.1 Calculating the Ventilation Rate for the Removal of Contaminants from Biomedical Laboratories by Farhad Memarzadeh, Ph.D., P.E., of the National Institutes of Health.

Consultants that address the indoor air quality using the dilution method must fully understand the shortcomings. Containment is preferred over dilution where practical. When dilution is used, concentration levels can vary greatly depending on air flow patterns within a room and the nature of the source or the contaminant. Contaminant is never evenly distributed within a room. The following equation is based evenly distribution. So, if used consideration shall be given to the fact that the results are only the average when supply air is mixing evenly with the contaminant. In practice, most areas within a room will have higher or lower concentrations.

Where:

C $C = C_0 e^{-[V_{removed} / V_{room}]}$ = the Ending Concentration of the Vapor in the Closed Space or Room, which Ending Concentration, measured in ppm, resulted from the purging activities:

C_0 = the Initial Concentration of the Vapor in the Closed Space or Room that is to be reduced by purging, also measured in ppm;

$V_{removed}$ = the Air Volume that has been withdrawn from the Closed Space or Room, measured in any suitable volumetric units, usually in cubic feet (ft); and

V_{room} = the Volume of the Room, measured in the same volumetric units as $V_{removed}$, which is usually in cubic feet (ft^3).

A real example of the use of the above equation would be if a consultant needs to assess the Aroom volumes≈ of air that must be withdrawn from (purged) a room in order to reduce the concentration of any volatile substance in the ambient air of that room buy 90% or by 99%. In order to achieve some well defined and specific decrease in the Astarting ambient concentration≈ of some unidentified volatile substance. From the perspective of the applicable formula listed above, we must view this as asking for a value of An≈, where An≈ is the number of Room Volumes for which -- once this volume of ambient, volatile filled air had been removed from the space -- would result in a situation where the residual room concentration of that volatile would be at or below the identified target concentration level. Specifically, seeking an exponent of Ae≈ in the following general format:

$$C = C_0 e^{-n \frac{V_{room}}{V_{room}}} = C_0 e^{-n}$$

$-\frac{n V_{room}}{V_{room}}$ Clearly, the AV_{room}≈ terms will cancel out, and we are left with the simple exponent value of n; and we can, therefore, see that formula evolves to the following:

of n, as a The task for the consultant is simply to determine the value number of Room Volumes, that corresponds to: (1) a decrease in the ambient concentration to a level that is only 10% of the starting value (i.e. the ending concentration, $C_{90\%}$, has the value $0.1C_o$]; and (2) a decrease in the ambient concentration to a level that is only 1% of the starting value [i.e. the ending concentration, $C_{99\%}$, has a value, $0.01C_o$].

For a 90% reduction in the concentration:

$$C_{90\%} = 0.1\ C_0 = C_0 e^{-n_{90\%}}$$

$$0.1 = e^{-n_{90\%}}$$

$$\ln 0.1 = -n_{90\%} = -2.303$$

$$n_{90\%} = 2.303$$

For a 99% reduction in the concentration:

$$\ln 0.01 = -n_{99\%} = -4.605$$

To achieve specified reductions in the ambient concentrations of any volatile substance, one must purge the following number of *Room Volumes* to attain the identified target reduction in the ambient room concentration level:

$$n_{99\%} = 4.605$$

Target Reduction as a Percentage	Number of Room Volumes
90%	-2.3
99%	-4.6

E.2 Calculating Minimum Separation Distance Between Intakes And Exhausts by Farhad Memarzadeh, Ph.D., P.E., of the National Institutes of Health.

Use of an expert consultant to do either wind tunnel or computational fluid dynamics (CFD) air dispersion modeling is highly recommended to analyze and make recommendations on these factors. Where this is done, it must assess the possibility of re-entrainment of any and all near-by exhausts into any and all near-by intakes. For example, where a new building is being designed, the CFD or wind tunnel analysis considers the impact of the new building as well as near-by existing buildings and other new and existing obstacles and considers new and existing exhaust relative to new and existing intakes.

When using CFD, certain factors shall be considered in the evaluation of external flow type scenarios. First, the size of intakes, chimneys, etc. in an external flow problem in comparison to the overall size of the solution domain considered is usually small. In terms of creating computationally tractable problems, it is difficult to resolve the grid close to these sources of heat, momentum, or concentration without being subject to numerical diffusion. To highly minimize the numerical diffusion augments and the effective viscosity, the solution domain shall use advance grids (meshing) or higher order differencing schemes. Second, the most widely accepted turbulence model used in CFD, namely the k-turbulence model, over-predicts turbulent viscosity in regions of decelerating flow. Therefore, the model shall be based on the assumption that the turbulent viscosity is the same in all three coordinate directions; that is, the viscosity is orthotropic. This is untrue for highly curved, swirling, or buoyant flows. All of these forms of flow regime are typically present in external flows of interest to some extent. The effects of this can be offset by alternatives, but they are subject to various problems.

To alleviate the concerns from the numerical simulation aspect, a series of grid refinement tests shall be carried out to minimize the effect of numerical diffusion in this calculation. The numerical diffusion in three dimensions can be approximated, using Patankar (1980), as:

$$\Gamma = \rho V \left[\frac{d_x d_y n_x n_y}{d_x n_x + d_y n_y} + \frac{d_y d_z n_y n_z}{d_y n_y + d_z n_z} + \frac{d_z d_x n_z n_x}{d_z n_z + d_x n_x} \right]$$

Where:

Δ = fluid cell density
V = fluid speed
(n_x, n_y, n_z) = unit vector // to flow
d_x, d_y, d_z = cell dimensions

Owing to the complex nature of this, the approach and the methodology of these calculations need to be agreed upon between the NIH and the contractor.

The results of such tests will be approved by the NIH. If it is found that the numerical diffusion issue cannot be addressed in a single model, then a "zoom-in" approach will be used. In this zoom-in approach, an initial model will be constructed that will represent the laboratory building plus all the surrounding buildings. The results from this initial simulation will then be taken from a volume immediately surrounding the laboratory building and applied to a second model that represents only the laboratory building and its immediate surroundings. If necessary, grid refinement tests will also be applied to the second model to ensure that numerical diffusion is eliminated as much as possible.

The following will be considered in this study. (Details and clear methodology for the calculations will be provided by the NIH. Contact Farhad Memarzadeh, Ph.D., P.E., ORF, for assistance and guidance.)

- A methodology for the calculation of reentrainment into the building.
- A methodology for the calculation of odor and health threshold limits (in mg/m^3) and their comparison against the numerical analysis data.
- A methodology for the determination of pass/fail criteria based on the threshold limit.
- Alternate wind speeds and directions from appropriate wind rose data.

E.3 Fume Hood Testing and Alarms System by Farhad Memarzadeh, Ph.D., P.E., of the National Institutes of Health.

Fume hoods in new laboratory facilities shall have a pressure-independent flow-monitoring device connected to a local audiovisual alarm within the laboratory area. For existing facilities, the implementation of airflow devices for fume hoods occurs during the renovation phase. When the fume exhaust falls below a preset safety level, the alarm will sound and the alarm light will come on.

All parts that are to be in contact with vapors/fumes in the hood, i.e., the sensing device, wiring, etc., shall be chemically resistant. All alarm systems shall be UL approved. There shall be a means to shut off the audible alarm to reset. The alarm shall have an internal timer so that the audible alarm is reactivated after a specified time (adjustable between 5 minutes and 15 minutes). The alarm shall have the capability to set the controller's setpoint to the safety level desired. There shall be a means for setting the controller's setpoint to the exhaust level desired. This adjustment shall be "internal" so that it is not readily adjustable by operating personnel. Upon return to normal flow, the alarm shall sound again until reset.

The ACGIH Guidelines are referenced in the DRM for fume hood testing. The ACGIH requirements do not specifically address all testing issues required by the NIH. The following criteria shall be used for testing fume hoods in NIH buildings:

The fume hood manufacturer, no later than 30 days after receipt of the order, shall provide to the owner the use of a state-of-the-art fume hood test facility meeting the requirements of the latest SMACNA Standard LF 10.

The hood manufacturer shall conduct modified ASHRAE Standard 110, 1995, protocol of 1,800 mm hood of similar design to the type specified. The bypass shall be designed so that face velocity does not exceed the maximum as the sash is lowered in a variable volume hood. Variable volume fume hood protocol of 1,800 or 1,200 mm shall be tested in accordance with the Modified ASHRAE 110 Test for minimum baseline requirements. The manufacturer shall provide a fume hood control system at its state-of-the-art test facility meeting the requirements of the latest SMACNA standard LF 10 on its cost for acceptance by the NIH prior to the delivery of hoods for installation. The minimum of 50% installed hoods at site will be again offered for testing on site by the contractor after installation and building balance prior to occupancy. The contractor shall arrange for tests to be conducted by an NIH-approved independent testing contractor. The specifications shall clearly identify the type of measurement devices that test a constant face velocity, such as hot wire anemometer, heated thermocouple anemometer, impact tube and side wall or other static tap, pitot tube, etc., or measure volume or mass flow rate using devices such as orifice and differential pressure measurement system, nozzle and differential

pressure measurement system, turbine flow meter, swirl flow meter, and vortex shedding meter. A hood of design similar to the type specified in the ASHRAE Standard 110 will have the parameters described in the next paragraph.

Fume Hood Testing: Note: This item must be included in the balancing specifications, the fume hood control specifications, and the hood specifications.

E.3.1 Fume Hood Containment Testing (Onsite): Laboratory areas and variable volume fume hoods shall be tested as installed to assess the level of containment. The test identified below was created by Farhad Memarzadeh, Ph.D., P.E., of NIH in 1997 and revised by Memarzadeh and Brightbill in 1999 and shall be performed during static and dynamic conditions. Testing shall be conducted as outlined below for 50% of the hoods provided in the project. Tests shall be characterized and referred to in two basic categories, "Static" and "Dynamic". "While elements of both static and dynamic testing exist in both test categories, these names are generally used for reference.

E.3.1.a Static Testing: Testing shall be conducted in accordance with ASHRAE 110 - *Method of Testing Performance of Laboratory Fume Hoods* with the following modifications. This is primarily a test of the hood and laboratory configuration.

Hoods will be tested with simulated apparatus. This apparatus will consist of two each 3.8 L round paint cans, one 300 mm x 300 mm x 300 mm cardboard box, and three each 150 mm x 150 mm x 300 mm cardboard boxes. These items will be positioned from 150 mm to 250 mm behind the sash, randomly distributed, and supported off the work surface by 50 by 50 mm blocks.

- The test gas will have a 6 L/min flow rate.
- Each test duration will be 5 minutes.
- Acceptable test results shall not exceed 0.05 ppm.
- At the conclusion of each 5 minute test, there will be three rapid walk-bys at 300 mm behind the manikin. Each two walk-bys will be spaced 30 seconds apart. If there is a rise in test gas concentration, it cannot exceed 0.10 ppm and must return to 0.05 ppm within 15 seconds.
- There will be a minimum of three and a maximum of five persons in the test room during the test procedure.
- Representatives of the NIH will witness the tests.

E.3.2 Dynamic Testing: Dynamic testing primarily tests the dynamic performance of the fume hood control system. This group of tests measures hood performance parameters through various dynamic "events." Events shall include four sash movements up and down across differing ranges: 25-100 percent and 50-100 percent, sash movements of other hoods on the exhaust duct, walk-bys in front of the hood, and opening and closing the laboratory door commensurate with a person entering and exiting the room. Hood parameters to be determined for each event are defined as follows (refer to Figure F.16.3.3 below for a graphical representation of some parameters):

- Measured Face Velocity (FVm expressed in m/s): Face velocity measured in the plane of the sash. Samples shall be recorded at no less than 10 Hz. Sensing methodology shall have an internal time coefficient of no more than 100 ms.

  Definitions:

  a. The internal time constant (ITC) is the amount of time it takes the sensor to respond 63 percent of the way to a step change.
  b. The response time is the length of time to get to within the stated accuracy of the sensor.
  c. Response time = ITC x 3 or 5 depending on the accuracy. Example: If the response time is 200 ms, the ITC = 40-70 ms.

  There shall be a point sensor located in the middle of the face opening when the sash is at the lowest position during the tested event. No fewer than three point sensors shall be used. Averages shall be calculated for any point in time

to assess overall measured face velocity; however, individual sensor samples shall be used in calculating turbulence intensity (TI).

- Total Exhaust Airflow (TEF expressed in L/s): Total exhaust flow measured in the main exhaust duct leaving the hood. This parameter shall be recorded at no less that 10 Hz. The sensing methodology used for the recorded data shall represent the total airflow through the full range of flows and be validated by independent multipoint measurement. If the fume hood control system uses a flow-sensing element, that element may be used assuming it can be calibrated across the full range of flow. Sensing elements must have an internal time coefficient of no more than 20 ms.
- Variable Face Area (FAv expressed in meters): Face area of the hood that varies as the sash is moved within specified limits.
- Fixed Face Area (FAf expressed in meters): Face area of the hood with sash at minimum position (minimum position shall correlate with the minimum bypass flow through the hood).
- Hood Airflow Leakage (HAL expressed in L/s): The difference in airflow between the measured airflow through the face (at minimum position) and the total airflow measured in the exhaust duct.
- Calculated Face Velocity (FVc): Face velocity determined from the following equation: (TEF-HAL x 1 000)/(FAv + FAf).
- Steady State Face Velocity (SSFV): The average of all sampled face velocities for a 5 second period. Two SSFVs will be determined for both measured face velocity and calculated face velocity; one before the event (SSFVb) and one after (SSFVa). The SSFVa will start 2 seconds after the end of TSS. The second suffix of m for measured and c for calculated shall be used to indicate the type of assessment.
- Face Velocity Baseline (FVBL): The average of SSFVa and SSFVb.
- Control Linearity (CL expressed in %): Abs (SSFVa-SSFVb)/(FVBL) x 100.
- Time to Steady State (TSS_{10} and TSS_5 expressed in seconds): The elapsed time from the initial sash movement until the FVc reaches and stays within ±10 percent or ±5 percent of FVBL (as indicated by the subscript).
- Face Velocity Overshoot/Maximum Deviation (FVO expressed in percent): Calculated using the Calculated Face Velocity sample farthest from the FVBL (FVf) throughout the test per the following equation: (Abs (FVf-FVBL)/FVBL) x 100. Samples include initial face velocity deviation immediately following the sash movement as the controls initially respond to the movement of the sash.
- Response Time Constant (RTC expressed in seconds): Elapsed time between initial movement of the sash and the initial subsequent movement of the exhaust valve.
- Steady State Deviation (SSD expressed in %): Face velocity variation from SSFVa or SSFVb as applicable. Calculated using the farthest sample from the applicable SSFV (FVf) using the following equation: (Abs (FVf-SSFVx)/SSFVx) x 100.
- Controllability (expressed in mV/mm): Describes controller response to changing sash position, i.e., controller's response signal change per unit distance of sash movement.
- Sash Position (SP expressed in mm): For vertical sashes, vertical distance from the sill of the hood to the bottom of the sash. The minimum sash position shall correlate with the position of the sash when the minimum flow through the hood is all through the face. Maximum sash position shall be defined as a distance of 550 to 650 mm. This parameter shall be recorded at no less than 10 Hz.
- Controller Output (CO expressed in volts): Control output to the controlling exhaust air valve. This parameter shall be measured and recorded at no less than 10 Hz.
- Turbulence Intensity (TI expressed in m/s): Calculated root mean square of the fluctuating face velocity determined using FVm. This value shall be calculated for each of the steady state conditions preceding and following each event. This shall be correlated with a "box leakage factor" of the installation using the *Methodology for Optimization of Laboratory Hood Containment* (MOLHC) by NIH Office of Research Services, Farhad Memarzadeh, Ph.D., P.E., principal investigator. While this value does not have a pass/fail requirement, it is the fundamental indicator of containment and therefore shall be clearly reported.

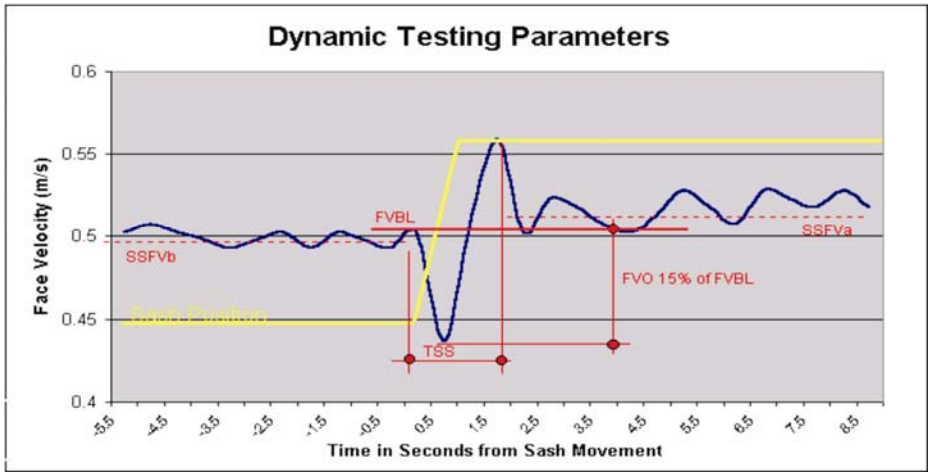

Figure E.3.A Dynamic Testing Parameters

E.3.3 Parameter Performance: Parameter performance requirements:

- Face Velocity Baseline (FVBL): 0.51 m/s ± .05 m/s
- Control Linearity (CI expressed in %): < 2%
- Time to Steady State$_{10}$ (TSS$_{10}$ expressed in seconds): <2 seconds
- Time to Steady State$_5$ (TSS$_5$ expressed in seconds): <3 seconds
- Face Velocity Overshoot/Maximum Deviation: <15%, which means at no point throughout the test shall a sample be recorded <0.43 m/s or >0.59 m/s
- Response Time Constant (RTC expressed in seconds): <0.5 seconds
- Steady State Deviation (SSD expressed in %): <5% assessed using calculated face velocities
- Controllability (expressed in mV/mm): >12 mV/25.4 mm

E.3.3.a Alternate Parameter Performance Requirements: The following performance parameters are alternate requirements that can be used in assessing acceptable dynamic responses:

- Face Velocity Baseline (FVBL): 0.51 m/s ± .05 m/s.
- Calculated Face Velocity (FVc): All samples >0.255 m/s and <0.89 m/s, meaning that at no time during the event shall the calculated face velocity be outside that range. Any sample recorded beyond that range will result in assessing the response as unacceptable.
- Control Linearity (CI expressed in %): <2%.
- Time to Steady State$_{10}$ (TSS$_{10}$ expressed in seconds): <1.6 seconds.
- Time to Steady State$_5$ (TSS$_5$ expressed in seconds): <2 seconds.
- Response Time Constant (RTC expressed in seconds): <0.5 seconds.
- Steady State Deviation (SSD expressed in %): <5% assessed using calculated face velocities.
- Controllability (expressed in mV/mm): >12 mV/25.4 mm.
- Test Execution: Testing agency shall be equipped to execute the testing and assess all performance parameters on site the day of the test. Data acquisition of required parameters shall be simultaneous.
- Test Documentation: All testing, calculated, and recorded parameters shall be presented in a report that shows the recorded parameters graphically and tabulates and summarizes all the results. Performance of the hood, the hood controls, and the laboratory in general shall be described and summarized.

Note: Fume Hood Control Testing (Offsite-Mockup) must be included only in the control manufacturer's specifications.

E.3.4 Fume Hood Control Testing (Offsite-Mockup): The manufacturer of the proposed fume hood control system shall mock up a fume hood installation and demonstrate the performance of its system to validate that they can meet the requirements specified herein. The offsite test shall include all parameters under the control of the control system (FVBL, TSS, CL, RTC, SSD, and Controllability). It is not necessary to mock up the installation and assess TI. Events to be tested off site include all specified sash movements on the hood being tested. Walk-by and door-opening affects are not required for the offsite test.
The testing shall be accomplished by an independent testing agency approved by the A/E and NIH. Reports shall be provided with the laboratory control submittals, and no approval will be given for the fume hood control system until documentation of successful demonstration of the performance requirements is submitted.

E.4 Harmonic Control in Electric Power Systems by Farhad Memarzadeh, Ph.D., P.E., of the National Institutes of Health.

E.4.1 Voltage Sag Concerns: Despite the main advantages provided by VSD's, the concern for nuisance tripping during voltage sag conditions remains. This power quality concern involves the control sensitivity to short-duration voltage sags and momentary interruptions. Actually, many different kinds of controls, and even motor contractors, are sensitive to these voltage sags. Voltage sags caused by faults on the power system represent one of the most important problems that can be experienced by the NIH with sensitive loads. Whenever there is a fault on the transmission or distribution system serving the NIH facility (faults cannot be completely avoided regardless of the system design), there will be either a voltage sag or an interruption. If the fault occurs on a parallel-distribution feeder circuit or on the transmission system, there will be a voltage sag that lasts until the fault is cleared by some protective device (typically 3-30 cycles depending on the fault location). A method of predicting the likelihood of faults in a certain region along with knowledge of equipment sensitivity can be used to determine an "area of vulnerability". A combination of computer short-circuit simulations and lightning performance analysis shall be used to determine the affected area. The VSD controls shall be designed to handle these voltage sag conditions without tripping. The specifications contain no-ride-through capability. This is an important consideration when VSD's are applied in critical processes such as that of the NIH, where nuisance tripping can cause significant problems. The A/E shall evaluate the level of sensitivity of the controls to voltage sags. If such concern exists, applying power conditioning to the controls themselves will be considered. Feroresonant transformers can handle voltage sags down to approximately 60 percent of the nominal voltage. This is sufficient to handle virtually all voltage sags caused by single line-to-ground faults on the power system. If additional protection is needed, the controls can be protected with an UPS system, which can handle complete interruptions in the input signal.

E.4.2 Transient Overvoltage Concerns: Transient overvoltage occurs in connection with capacitor switching. Each time a capacitor is energized, a transient voltage oscillation occurs between the capacitor and power system inductance. The result is a transient overvoltage that can be as high as 2.0 V per unit (of the normal voltage) at the capacitor location. The magnitude is usually less than 2.0 V per unit as a result of dampening provided by system loads and losses. The transient overvoltage caused by capacitor energizing is generally not a concern to PEPCO because its magnitude is usually below the level at which surge-protective devices operate (1.5 to 2.0 V per unit). However, these transients can be magnified at the NIH facility if the NIH has low-voltage capacitor banks for (displacement) power factor correction. The A/E shall check for this matter. When the frequency of a transient overvoltage matches the series-resonant frequency of the NIH transformer coupled with PEPCO capacitor(s) at the East Substation, a low-impedance, high-current (at the resonant frequency) condition results. As this large current passes through the NIH transformer, it induces a large voltage "drop" that passes through zero voltage to create a large voltage of opposite sign (because of a phase-angle change) at the resonant frequency. The VSD and the NIH paralleled capacitor (and their surge protection devices) then see this magnified voltage (compared to distribution feeder voltage). When the resonant-frequency current completes its path to ground through the capacitor, the voltage experiences a "boost" to the ground-reference voltage. The magnification of capacitor-switching transients is most severe when the following condition exists: The capacitor switch on the higher voltage system is much larger (kVAR) than the capacitor at the low-voltage bus. Generally, this situation occurs most frequently for substation switching. The frequency of oscillation that occurs when the high-voltage capacitor is energized is close to the resonant frequency formed by the stepdown transformer in series with the low-voltage capacitor. There is little resistive load on the low-voltage system to provide dampening of the transient, as is usually the case for industrial plants (motors do not provide significant damping of these transients). It is not uncommon for magnified transients at low-voltage

capacitors to range from 3.0 to 4.0 V per unit. These transients have significant energy associated with them and are likely to cause failure of protective devices, metal oxide varistors (MOV's), electronic components (silicon-controlled rectifiers, etc.), and capacitors. VSD's are particularly susceptible to these transients because of the relatively low peak-inverse voltage ratings of the semiconductor switches and the low-energy ratings of the MOV's used to protect the VSD power electronics. The following shall be evaluated and identified in the specifications to control these magnified transient overvoltages: using vacuum switches with synchronous closing controls to energize the capacitor bank and control the capacitor-switching transient; providing high-energy MOV protection on the 480 V buses (the energy capability of these arresters shall be at least 1 kJ); or using tuned filters for power factor correction instead of just shunt capacitor banks (the tuned filters change the frequency response of the circuit and usually prevent magnification problems; this solution combines power factor correction, harmonic control, and transient control).

E.4.3 Electromagnetic Interference and Radio Frequency Interference Concerns: IEEE Standard 519, *Recommended Practices and Requirements for Harmonic Control in Electric Power Systems,* recommends limits for voltage distortion and harmonic current resulting from nonlinear loads. However, the IEEE standard is not intended to cover the effects of radio frequency interference (RFI). As a result, specifications will occasionally refer to Federal Communications Commission (FCC) *Rules and Regulations*, Volume 2, Part 15, Subpart J, Class A (referred to as "FCC rule") to establish limits on electromagnetic emission for VSDs. The FCC rule was printed in October 1982 primarily for computing devices. Computers generate RF energy and possibly cause interference with nearby equipment if misapplied. Generally, the rule sets conducted and radiation RF limits for electronic devices using timing signals or digital techniques with pulse rates in excess of 10 000 pulses per second. Technically speaking, VSD's with high-frequency timing circuits conform to this description, although they are not intended as a computing device described in the FCC rule. The primary and more significant source of electromagnetic interference (EMI) from a VSD stems from the power circuits, and, in this respect, drives become an incidental radiation device. The only requirement for incidental radiation devices in the FCC rule is that they shall be operated so that the RF energy emitted does not cause harmful interference. If so, the operator must eliminate the interference. All VSD's, regardless of the manufacturer, will produce electromagnetic emission to some degree. Primarily, these emissions are due to the steep wave fronts and very rapid switching of power semiconductors in the VSD. Typically this occurs when transistors, GTO's, or other "fast devices" are gated on and off in DC chopper circuits and inverter power circuits for PWM, current source, and six-step drives. Typically, conductors to the VSD's and motor act as an antenna and radiate the RF energy into the media. Therefore, it is possible for RF to be induced into nearby antennas and other conductors and be carried to the loads in that circuit. Holding a portable AM radio near a power outlet in close proximity to an EMI source can be evidence of this situation. Distributive digital control (DDC) systems, medical alarms system and equipment, telecommunication services, and other electronic equipment utilizing very high frequencies may experience noisy interference or malfunctions when subject to EM/RF energy. The specification shall clearly outline the corrective measures required. The first and foremost corrective measure to avoid problems associated with EMI is proper routing of the drive conductors in separate metallic conduits (even separate raceways if practical) as remote as possible from any other conductors or suspect equipment. Usually, this will be sufficient to avoid EMI problems. EM/RF filters can be engineered for a system to trap or inhibit high-frequency emissions into power system conductors. However, because of the nature of EMI, the effectiveness of any filter is highly sensitive to where it is installed. Further, it is not certain that the filter will correct the problem even though it may meet FCC limits. Most manufacturers will include this footnote with their literature: "Filters are expensive and usually require additional space. It is recommended that they be furnished only when they are specifically required to avoid or solve a problem after exhausting all proper installation methods. In addition, filters are an additional component and must be considered in the overall reliability of a power system". To contain RF radiation through the media from the VSD, complete shielding using a metallic enclosure generally is required. This will usually contain most of the radiated RF to a reasonable distance.

E.5 Calculation Protocols for Canopy Hoods over Autoclaves: NIH Local Exhaust Ventilation (LEV) Test Protocol by Farhad Memarzadeh, Ph.D., P.E., of the National Institutes of Health.

Volumetric airflow (Q) in CFM of an LEV is determined by: $Q = V \times A$

Where: V = Average air velocity at hood's face, point of measurement (ft/min)
A = Area of Hood's face monitored (ft^2)

It is required by NIH testing protocols that the calculated velocity at the point of work is 50 ft/min (minimum).

Capture velocity is the calculated air velocity required at the point of steam release and necessary for receiving potentially contaminated air into the hood. This is not a measured value. Capture velocity can be calculated by:

$$V' = Q / 1.4\ PD$$

Where: Q = Volumetric airflow through hood (ft^3/min.)

K = A constant, varying with dimensional relations of canopy and source of contaminant [A value of 1.4 has been established where horizontal dimensions of the canopy are 40% greater than the corresponding dimensions of the source.]

P = Perimeter of work area, or perimeter of source (ft.)

D = Vertical distance between source (top of autoclave door) and canopy (ft.)

V'= required average air velocity through area between source and canopy (fpm).

In the setting of a canopy hood located above an autoclave or sterilizer door, the "work area" is defined as the vertical planar surface exposed when the sterilizer door is opened. For the purposes of calculation, parameter D will be taken as the height between the top of the sterilizer door and the capture area of the hood. The site of contaminant generation is the top of the door as defined by NIH for this protocol. Per NIH instruction, parameter P will be taken as that sterilizer door width and a horizontal extension (width of hood's face) to form a rectangle or square.

Current building design calls for installation of all canopy hoods at 2440 mm above finished floor. Recent discussions with ORFDO have indicated this height can be reduced to 1980 mm. There will therefore be sufficient headroom for standing immediately in front of the autoclave when it is not in use.

A Crucial Note: A deep skirt around the edges of a canopy used over autoclaves is recommended. The thermal head or stack effect can cause some spillage around the edges of the canopy if there is not sufficient skirt depth for effective containment, during the exhaust transition to the duct. {See following pages for example of canopy currently in use over an autoclave}.

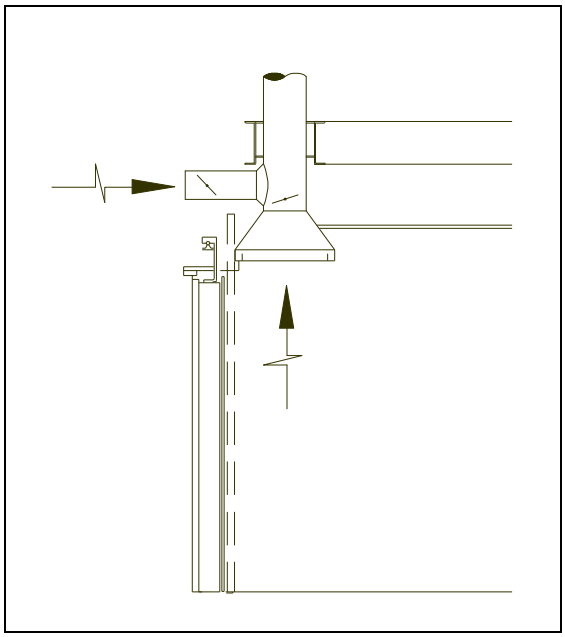

Placement of canopy directly over rising steam is essential for 100% receiving effectiveness.

Example of Calculations for above Canopy:

With current hood flow, the capture velocity is:

Q = VA

V = 301 avg. (fpm)

A = 5.25 ft. squared

Q = 1580.25 CFM

V'= Q / 1.4 PD

V' = 1580.25 CFM / 1.4(6.42ft x 1.75ft)

V' = 100.47 ft/min., > 50 ft/min minimum

A minimal hood flow, with a face velocity of 149.8 fpm, will deliver a capture velocity of 50 ft/min. Because of the hood's design with a deep skirt, its effective accommodation and containment capacity is maintained.

E.6 Selecting and Specify Variable Frequency Drives for HVAC Systems by Farhad Memarzadeh, Ph.D., P.E., of the National Institutes of Health.

ABSTRACT

Increasing energy costs over the past decade have given rise to the use of Variable-Speed Drives (VFD's) in efforts to reduce energy costs. The reliability of these drives has greatly improved over the first generations' and, as sales have increased, the cost has dropped to a point where these drives are very cost effective, if properly applied.

For variable-speed drives to be considered for a HVAC application, certain basic requirements will increase there effectiveness. HVAC systems that generally benefit from VFD's include air handling systems that can afford a turn down of at least 20% due to the load variation in the space that are serving, secondary pumping for chilled-water systems, hot-water pumps, and most other pumping systems with variable-flow requirements. VFD's generally are not effective for primary chilled-water or other pumping systems where constant flow is desired.

This article describes in detail different types of VFD's and addresses specific issues regarding the usage and specification of VFD's.

TYPES of VARIABLE FREQUENCY DRIVES

Variable frequency drives (VFD's), a type of variable speed drive, are motor controllers that vary the speed of squirrel cage induction motors. VFDs save substantial energy when applied to variable-torque loads, and result in reductions in electricity bills in most facilities. These energy savings are possible with variable-torque loads, such as fans and pumps, because torque varies as the square of speed, and horsepower varies as the cube of speed. For example, if fan speed is reduced by 20%, motor horsepower (and energy consumption) is reduced by 50%. VFD's generate variable voltage and frequency output in the proper volts/hertz ratio for the motors from the fixed utility-supplied power. VFD's can be retrofitted into existing motor systems, and can operate both standard and high-efficiency motors ranging in size from 1/3 HP to several thousand HP. Unlike mechanical or hydraulic motor controllers, they can be located remotely and do not require mechanical coupling between the motor and the load. This simplifies installation and alignment of motor systems.
Variable-flow applications where throttling or bypass devices are used to modulate flow are good candidates for VFD's. These include centrifugal fans, pumps (centrifugal, propeller, turbine), agitators, and axial compressors. If HVAC fans have inlet vanes or outlet dampers to throttle full air output installed in variable-air-volume systems, these dampers or vanes typically can be removed or disabled and retrofitted with VFD's. Circulation pumps for chilled water often have throttling or bypass valves that can be retrofitted with VFD's.

Three major VFD designs are commonly used: pulse width modulation (PWM), current source inverter (CSI), and variable voltage inverter (VVI). A fourth type, the flux vector PWM drive, is gaining popularity but is considered too expensive and sophisticated for normal applications. Knowing the characteristics of the load is critical for evaluating the advantages and disadvantages of each available technology.

[1] Pulse width modulation (PWM) is the dominant VFD design in the 1/2 HP to 500 HP range because of its reliability, affordability and availability. PWM outputs emulate sinusoidal power waves by varying the width of pulses in each half cycle. Advantages of PWM's are low harmonic motor heating, excellent input displacement power factor, high efficiencies at 92% to 96%, and ability to control multiple motor systems with a single drive.

[2] Current source inverter (CSI) designs are quite reliable due to their inherent current-limiting characteristics and simple circuitry. CSI's have regenerative power capabilities, meaning that CSI drives can reverse the power flow back from the motor through the drive. However, CSI's "reflect" large amounts of power harmonics back to the source, have poor input power factors, and produce jerky motor operations (cogging) at very low speeds. CSI's are typically used for large (over 300 HP) induction and synchronous motors.

[3] Voltage source inverter (VSI) designs are similar to CSI designs, but VSI's generate variable-frequency outputs to motors by regulating voltage rather than current. Harmonics, power factor, and cogging at low frequencies can be problems.

The best applications for VFD's are large motors that can operate for many hours each year at reduced speeds. Some opportunities common in facilities include the following:

[1] Variable-air-volume HVAC fans. Air flow in older VAV systems is usually controlled by opening and closing dampers or inlet vanes. Because the systems often operate at low air flow, large energy savings are possible by conversion to VFD's. VFD's vary motor speed in order to match fan output to varying HVAC loads.

[2] Cooling tower fans. Cooling towers may be good candidates for VFD's because motors are large, fans can operate for long periods of time, and loads can vary both seasonally and diurnally.

[3] Circulating water pumps for chillers and boilers. Pumping systems can be made variable by sequencing fixed-speed pumps and a single variable speed pump. This will save the cost of installing VFD's on each pump.

[4] Special industrial applications such as grinding and materials handling where precise speed control is required. The economics depend on the size and run-time of the motors involved.

VFD's should be properly specified and installed to avoid generation of excessive electrical noise and harmonics as well as damage to their electronics. This includes proper grounding, mounting, connection, voltage, and cooling. The specification of the VFD's should as the minimum include the following:

1. What level of reliability is required of the VFD system?

2. What operational overloads and starting conditions are required by the application?
   Typical requirements may be: Variable torque = 115% for 1 minute, Constant torque = 150% for 1 minute

3. How will control commands for the VFD be generated by the process?
   - Manual / potentiometer
   - Analog current loop 4-20 mA
   - Serial communication (RS232, RS485, etc.)
   - Isolated or non-isolated
   - Process feedback (pressure, temperature, flow, etc.)

4. What characteristic surges, sags or momentary discontinuities are present in the supply? Are there any other non-linear loads on the feeder?
   - KVA, Short circuit level
   - Power factor capacitors
   - Breaker reclosing
   - Lightning

5. What levels of voltage distortion exist on the power system before the VFD is applied? What harmonic current spectrum will be injected into the supply system by the VFD? What is the magnitude of distortion on the supply voltage before and after? Will this harmonic current injection affect other loads?

6. What speed range is required? Will the load be operated beyond base speed?

7. Are all parts of the rotating load suitable for the range of vibration excitation frequencies?

8. What waveform does the VFD produce? Are there any constraints on motor connection length?

9. Is the motor sized to provide necessary load torque while operating at reduced speed? The power capability of the motor may be restricted at low speeds. Compare the motor output capability with the load requirement. An additional cooling fan may be required for constant torque loads. (This pertains to constant torque systems, such as compressors, etc.)

10. What heat rejection occurs in the VFD controller? How are the losses removed from the equipment? The heat generated within the VFD is normally removed by air or water cooling.

11. What is the range of voltage and frequency of the electric supply which will permit full rated output of the VFD? What happens outside the range? What line transients can be tolerated? What is the VFD input power factor?

12. How does the VFD operate under fault conditions? For example, mechanical overload, electrical short circuit in the motor circuit or a ground fault in the load system.

13. What motor protection is provided by the VFD equipment? What additional protection is advised for comprehensive system protection, e.g., overload, overspeed, reverse rotation.

14. What information is available from the manufacture for system operations and maintenance? What self diagnostic tools are included or available? Warranty offered? Training available? Operation and maintenance manuals?

15. Total Power Factor (i.e., Real P.F. and Apparent P.F.). The difference between the two is caused by inductance (reactive element) in transformers, motors, etc.

16. Harmonic Voltages and Currents

    Variable Frequency Drives (VFD's) inject harmonic currents into the power system due to the nonlinear nature of switching in electronic power devices. The harmonic currents combined with the system impedance frequency response characteristic and create harmonic voltage distortion. The harmonic voltages and currents can cause spurious operation of PEPCO and NIH relays and controls, capacitor failures, motor and transformer overheating, and increased power system losses. These problems are usually compounded by the application of power factor correction capacitors (especially on the NIH's low-voltage system), which can create resonance conditions that magnify the harmonic distortion levels. Several concerns associated with harmonic distortion levels need to be addressed in the specification. This will avoid significant harmonic-related problems with both the VFD equipment and the NIH operations controlled. These concerns include the following:

    Harmonic distortion on both the supply side and motor side of the drive.
    Equipment derating due to harmonic distortion produced by VFDs.
    Audible noise caused by high-frequency (several kilohertz) components in the current and voltage.
    Harmonic filter design and specification.

17. Nuisance Tripping Concerns

    A three-phase VFD system consists of three basic components (rectifier, dc link, and inverter) and a control system. The rectifier converts the three-phase 60-Hz ac input to a dc signal. Depending on the system, an inductor, a capacitor, or a combination of these components smoothes the dc signal (reduces voltage ripple) in the dc link. The inverter circuit converts the dc signal into a variable-frequency ac voltage to control the speed of the induction motor. Since for this application a Voltage-Source Inverter (VSI) Drive is considered, I will outline the concerns regarding this particular device. These drives (the most common types up to 300 hp) use a large capacitor in the dc link to provide a relatively consistent dc voltage to the inverter. The inverter then chops this dc voltage to provide a variable-frequency ac voltage for the motor. VSI drives can be purchased off the shelf and employ pulse-width-modulation (PWM) techniques to improve the quality of the output voltage waveform. However, here is a concern regarding nuisance tripping due to capacitor switching transients. Small VFD's have a VSI rectifier (ac to dc) and use as PWM inverter (dc to ac) to supply the motor. This design requires a dc capacitor to smooth the dc link voltage. The controls for this type of drive have protection for dc overvoltages and under voltages with narrow thresholds. It is not uncommon for the dc over voltage control to cause tripping of the drive whenever the dc voltage exceeds 1.17 per unit (for this particular application 760 volts for a 480-volt application). Since the dc capacitor is connected alternately across each of the three phased, drives of this type can be extremely sensitive to overvoltages on the ac power side. One event of particular concern is capacitor switching on the PEPCO system. PEPCO voltage switching transients result in a surge of current into the dc link capacitor at a relatively low frequency (300-800 Hz). This current surge charges the dc link capacitor, causing an over voltage to occur (through Ohm's law). The over voltage (not necessarily magnified) exceeds the voltage tolerance thresholds associated with the over voltage protection, which most likely will trip the VFD out of service. This is called nuisance tripping because the situation can occur day after day, often at the same time. Several methods are available to ameliorate such tripping; some are simple and some costly. Use of a harmonic filter to reduce overvoltages, an expensive alternative, is effective in protecting drives from component failure, but may not completely eliminate nuisance tripping of small drives. The most effective (and inexpensive) way to eliminate nuisance tripping of small drives is to isolate them from the power system with series inductor (chokes). With a concomitant voltage drop across the inductor, the series inductance of the choke(s) reduce(s) the current surge into the VFD, thereby limiting the dc over voltage. The most important issue regarding this method is that the designer should determine the precise inductor size for each particular VFD; this requires a detailed transient simulation that takes into

account capacitor size, transformer size, etc. The choke size must be selected carefully. If the choke has too much impedance, it can increase harmonic distortion levels and notching transients at the drive terminals. Chokes for this application are commercially available in sizes from 1.5% to 5% of the VFD impedance at various hp ratings. A size of 3% is sufficient to avoid nuisance tripping due to capacitor switching operations. Standard isolation transformers serve the same purpose.

18. Voltage Sag Concerns

Despite the many advantages provided by VFDs, the concern for nuisance tripping during voltage sag conditions remains. This power quality concern involves the control sensitivity to short-duration voltage sags and momentary interruptions. Actually, many different kinds of controls, and even motor contractors, are sensitive to these voltage sags. Therefore, voltage sags caused by faults on the power system represent one of the most important problems that can be experienced by the NIH with sensitive loads. Whenever there is a fault on the transmission or distribution system serving the NIH facility (faults cannot be completely avoided regardless of the system design), there will be either a voltage sag or an interruption. If the fault occurs on a parallel distribution feeder circuit or on the transmission system, there will be a voltage sag that lasts until the fault is cleared by some protective device (typically 3-30 cycles depending on the fault location). A method of predicting the likelihood of faults in a certain region along with knowledge of equipment sensitivity can be used to determine an "area of vulnerability." A combination of computer short-circuit simulations and lightning performance analysis should be used to determine the affected area. The VFD controls should be designed to handle these voltage sag conditions without tripping. I have not seen in the specifications a ride-thru capability. This is an important consideration when VFDs are applied in critical processes such as NIH, where nuisance tripping can cause significant problems. The designer should evaluate the level of sensitivity of the controls to voltage sags. If such concern exists we should consider applying power conditioning to the controls themselves. Ferroresonant transformers can handle voltage sags down to approximately 60% of the nominal voltage. This is sufficient to handle virtually all voltage sags caused by single line-to-ground faults on the power system. If additional protection is needed, the controls can be protected with an uninterruptible power supply (UPS) system, which can handle complete interruptions in the input signal.

19. Transient Over voltage Concerns

Transient overvoltages occur in connection with capacitor switching. Each time a capacitor is energized, a transient voltage oscillation occurs between the capacitor and power system inductance. The result is a transient over voltage that can be as high as 2.0 per unit (of the normal voltage) at the capacitor location. The magnitude is usually less than 2.0 per unit due to dampening provided by system loads and losses. The transient overvoltages caused by capacitor energizing are generally not a concern to PEPCO because their magnitude is usually below the level at which surge protective devices operate (1.5-2.0 per unit). However, these transients can be magnified at the NIH facility if the NIH has low-voltage capacitor banks for (displacement) power factor correction. (The designer should check for this matter.) When the frequency of a transient over voltage matches the series-resonant frequency of the NIH's transformer coupled with the PEPCO'S capacitor(s) at the East Substation, a low-impedance, high-current (at the resonant frequency) condition results. As this large current passes through the NIH transformer it induces a large voltage "drop" that passes through zero voltage to create a large voltage of opposite sign (because of a phase-angle change) at the resonant frequency. The VFD and the NIH paralleled capacitor (and their surge protection devices) then see this magnified voltage (compared to distribution feeder voltage). When the resonant-frequency current completes its path to ground through the capacitor, the voltage experiences a "boost" to the ground-reference voltage. The magnification of capacitor switching transients is most severe when the following conditions exist: The capacitor switched on the higher voltage system is much larger (kVAR) than the capacitor at the low-voltage bus. Generally, this situation occurs most frequently for substation switching. The frequency of oscillation that occurs when the high-voltage capacitor is energized is close to the resonant frequency formed by the step-down transformer in series with the low-voltage capacitor. There is little resistive load on the low-voltage system to provide dampening of the transient, as is usually the case for industrial plants (motors do not provide significant damping of these transients). It is not uncommon for magnified transients at low-voltage capacitors to range from 3.0-4.0 per unit. These transients have significant energy associated with them and are likely to cause failure of protective devices, metal oxide varistors (MOV's), electronic components (silicon-controlled rectifiers, etc.), and capacitors. VFD's are particularly susceptible

to these transients because of the relatively low peak-inverse voltage ratings of the semiconductor switches and the low-energy ratings of the MOV's used to protect the VFD power electronics. The following should be evaluated and identified in the specifications to control these magnified transient overvoltages: By using vacuum switches with synchronous closing control to energize the capacitor bank and control the capacitor switching transient. By providing high-energy MOV protection on the 480-volt buses. (The energy capability of these arresters should be at least 1 kJ.) By using tuned filters for power factor correction instead of just shunt capacitor banks. (The tuned filters change the frequency response of the circuit and usually prevent magnification problems. This solution combines power factor correction, harmonic control, and transient control.)

20. EMI and RFI Concerns

IEEE Std. 519, Recommended Practices And Requirements for Harmonic Control In Electric Power Systems, recommends limits for voltage distortion and harmonic current resulting from non-linear loads. However, the IEEE standard is not intended to cover the effects of radio frequency interference. As a result, specifications will occasionally refer to FCC Rules & Regulations volume 2 Part 15 Subpart J Class A (referred to as "FCC rule") to establish limits on electromagnetic emission for VFD's. The "FCC rule" was printed in October 1982 primarily for computing devices. Computers will generate RF energy and possibly cause interference with nearby equipment if misapplied. Generally, the rule sets conducted and radiation RF limits for electronic devices using timing signals or digital techniques with pulse rates in excess of 10,000 pulses per second. Technically speaking, VFD's with high frequency timing circuits conform to this description, although they are not intended as a computing device described in the "FCC rule." The primary and more significant source of EMI from a VFD stems from the power circuits, and in this respect, drives become an incidental radiation device. The only requirement for incidental radiation devices in the "FCC rule" is that they shall be operated so that the RF energy emitted does not cause harmful interference - if so, the operator must eliminate the interference. All VFD's, regardless of the manufacturer, will produce electromagnetic emissions to some degree. Primarily, these emissions are due to the steep wave fronts and very rapid switching of power semi-conductors in the VFD. Typically this occurs when transistors, GTO's or other "fast devices" are gated on and off in dc chopper circuits, and inverter power circuits for PWM, current source, and six-step drives. Typically conductors to the VFD's and motor act as an antenna, and radiate the RF energy into the media. Therefore it is possible for RF to be induced into nearby antennas and other conductors, and be carried to the loads in that circuit. Holding a portable AM radio near a power outlet in close proximity to an EMI source can be evidence of this situation. DDC control system, telecommunication services and other electronic equipment utilizing very high frequencies may experience noisy interference or malfunctions when subject to EM/RF energy. The specification should clearly outline the corrective measures required. The first and foremost corrective measure to avoid problems associated with EMI is proper routing of the drive conductors in separate metallic conduits, and even separate raceways, if practical, and as remote as possible from any other conductors or suspect equipment. Usually, this will be sufficient to avoid EMI problems. EM/RF filters can be engineered for a system to trap or inhibit high frequency emissions into power system conductors. However, due to the nature of EMI the effectiveness of any filter is highly sensitive to where it is installed. Further, it is not assured that the filter will correct the problem even though it may meet FCC limits. Most manufacturers will include this footnote with their literature. "Filters are expensive and usually require additional space. It is recommended that they be furnished only when they are specifically required to avoid or solve a problem after exhausting all proper installation methods. In addition, filters are an additional component and must be considered in the overall reliability of a power system." To contain RF radiation through the media from VFD, complete shielding using a metallic enclosure is required. This will usually contain most of the radiated RF to a reasonable distance.

21. Ensure that the power voltage supplied to VFD's is stable within plus or minus 10% to prevent tripping faults.

22. Motors operating at low speeds can suffer from reduced cooling. For maximum motor protection on motors to be run at low speeds, install thermal sensors that interlock with the VFD control circuit. Standard motor protection responds only to over-current conditions.

23. Speed control wiring, which is often 4 mA to 20mA or 0 VDC to 5 VDC, should be separated from other wiring to avoid erratic behavior. Parallel runs of 115V and 24V control wiring may cause problems.

Precautions for specifying, installing and operating VFDs are numerous. Improper installation and start-up accounts for 50% of VFD failures.

1. Use the VFD start-up sheet to guide the initialization check prior to energizing the VFD for the first time.

2. Corrosive environments, humidity above 95%, ambient air temperatures exceeding 40°C (104°F), and conditions where condensation occurs may damage VFDs.

3. If a VFD is started when the load is already spinning, the VFD will try to pull the motor down to a low, soft-start frequency. This can result in high current and a trip unless special VFDs are used.

4. Switching from grid power to emergency power while the VFD is running is not possible with most types of VFDs. If power switching is anticipated, include this capability in the specification.

5. If electrical disconnects are located between the VFD and motor, interlock the run-permissive circuit to the disconnect.

6. If a motor always operates at rated load, a VFD will increase power use, due to electrical losses in the VFD.

7. Use "inverter duty" motors on new installations that will have VFDs.

References

Murphy, Howard G., "Power Quality Issues with Adjustable Frequency Drive - Coping with Power Loss and Voltage Transients," *Iron and Steel Engineer*, February 1994.

Turkel, Solomon S., "Understanding Variable Speed Drives (parts 1 to 6)," *Electrical Construction and Maintenance*, February to July 1995.